p-ISSN 2338 – 3216
e-ISSN 2528 – 1070

JURNAL STATISTIKA
UNIVERSITAS MUHAMMADIYAH SEMARANG
13(1) 2025: 74-84

Jurnal Statistika
Universitas Muhammadiyah Semarang

COMPARISON OF FEEDFORWARD NEURAL NETWORK AND LONG SHORT TERM MEMORY IN SENTIMENT ANALYSIS OF SHOPEE APPLICATION REVIEWS

Yessica Maretha Simanjuntak[1], Dwi Ayu Lusia[2*]
[1,2] Department of Statistics, Faculty of Mathematics and Natural Sciences, Universitas Brawijaya, Indonesia

***e-mail**: *dwiayulusia@ub.ac.id*

Article Info:
Received: November 14, 2024
Accepted: September 5, 2025
Available Online: September 5, 2025

Keywords:
Feedforward Neural Network; Long Short Term Memory; Sentiment Analysis; Shopee
.

Abstract: Sentiment analysis is a method for generating types of views or opinions that express positive, neutral or negative sentiments. The application of sentiment analysis was carried out to determine the sentiment of Shopee application users. This research uses an artificial neural network algorithm to learn patterns from training data to predict the sentiment of the test data class. The aim of the research is to determine sentiment classification, identify the optimal Feedforward Neural Network and Long Short Term Memory architectural models in classifying user reviews of the Shopee application and compare the performance of the models based on the level of accuracy. The data set is divided into training data and test data respectively by 80% and 20%. The research results showed that there were 91.865 reviews with positive sentiment, 63.038 negative reviews and 26.662 neutral reviews based on *Valanced Aware Dictionary Sentiment lexicon* dictionary. The network architecture used is one hidden layer, with 137 hidden neurons and a two hidden layer model, with 491 units of first hidden neurons and 38 units of second hidden layer neurons. Evaluation of sentiment classification of Shopee application users resulted in the highest accuracy rate on the single-layer LSTM model, at 68,93%, with precision of 61,29%, and recall of 56,10%.

1. INTRODUCTION

Machine Learning is a type of artificial intelligence that develops algorithms to allow computers to learn from given data without explicit programming[1]. Supervised learning techniques have a guided or supervised way of working that requires a labeled dataset to perform learning so that the machine can identify the input label with its features to perform classification tasks. Classification algorithms allow computers to categorize data into classes by learning patterns in the data. This research focuses on *neural networks* for the classification of long and varied review texts. The deep learning algorithms applied in the research are Feedforward Neural Network (FFNN) and Long Short Term Memory (LSTM). FFNN is a basic type of neural networks where information flow only moves in one direction. LSTM has the ability to understand context in sequential data, such as review text.

Sentiment analysis is a technique to extract information in the form of a person's views on a particular issue or topic from text data and classify them into sentiment categories such as positive, negative, and neutral. The use of the internet has become a means to conduct online

[DOI: 10.26714/jsunimus.13.1.2025.74-84]

trade transactions known as electronic commerce or e-commerce. Along with the development of technology, e-commerce is now accessible through mobile apps that can be easily downloaded and used on mobile devices. User reviews play an important role in the development of e-commerce platforms. Based on data from the Similar web website in September 2023, Shopee is ranked first in the shopping application category in Indonesia on the Google Play Store. Google Play Store is a digital distribution service operated by Google as the official application store on Android. The Play Store provides features that allow users to provide ratings and reviews of an application. The reviews reflect the views and feelings of users. Therefore, this research was conducted to determine the sentiment of Shopee application, identify the optimal architecture and compare the performance of FFNN and LSTM models in classifying the sentiment.

2. LITERATURE REVIEW

2.1. Sentiment Analysis

Sentiment analysis, also referred to as *opinion mining*, is a research field that examines the views of individuals' feelings, judgments, attitudes, and emotions towards various entities, such as products, services, issues, events, topics, and attributes associated with these entities [2].

2.2. Text Preprocessing

Data preprocessing involves a series of actions to convert data into a series of word arrays [3]. This stage selects the data to be processed so that each word is broken down into smaller parts so that it has a narrower and more structured meaning.

a. Case folding is the process of converting the entire text in a document into lowercase to reduce variations [4].
b. Cleaning.In the cleansing stage, text is cleaned from characters that are not useful in sentiment classification, such as punctuation, repeated punctuation, numbers, url links, tabs, hashtags, emoticons, excess spaces, and single characters.
c. Word normalization is carried out to change words in reviews that are not standard, abbreviated words, slang words or slang into standard words [5].
d. Stopword removal is the process of reducing words that contain little information so that it only focuses on important words [6].
e. Tokenization is the process of breaking down sentences into more meaningful words for easier analysis [7].
f. Stemming is a technique used to simplify words by converting words into their basic form by removing affixes [8].

2.3. Data Labeling

Data labeling is the process of categorizing *preprocessed* review text data into positive, neutral, and negative groups. In this research, data labeling is done automatically by utilizing the *VADER* (*Valanced Aware Dictionary Sentiment Reasoner*) *lexicon* dictionary. *VADER* is a lexical approach used as a model to evaluate data diversity through the mood and intensity of existing emotions according to the available *lexicon* dictionary [9]. Each word in the review will generate a positive, negative, and neutral score, which are then summed to form a *compound. Compound* calculates the normalized score, as shown in Equation (1) below.

$$C = \frac{x}{\sqrt{x^2 + \alpha}} \quad (1)$$

[DOI: 10.26714/jsunimus.13.1.2025.74-84]

2.4. Feature Extraction

Sarkar [10] has argued that feature extraction is the process of extracting and selecting features into numerical representations so that they can be learned by machine learning algorithms. This paper using Term Frequency - Inverse Document Frequency.

TF-IDF method was developed which calculates the Term Frequency (TF) and Inverse Document Frequency (IDF) values on each token or word in each document. TF-IDF weigh shows how important or relevant a term (word) is to a particular review in the entire corpus, as shown in Equation (2) and (3).

$$\mathrm{IDF_t} = \ln\left(\frac{\mathrm{D}}{\mathrm{DF_T}}\right) + 1 \tag{2}$$

$$\mathrm{W_{dt}} = \mathrm{TF_{dt}} \times \mathrm{IDF_t} \tag{3}$$

2.5. Artificial Neural Network

Artificial Neural Network is a system that is similar to the neural network of living beings in processing information. ANN defines a neuron as the central processing unit in performing mathematical operations. The neural network equation from the hidden layer to the output layer is shown in Equation (4) and (5).

$$Z_k(X_1, X_2, \dots, X_n) = f_1\left(\sum_{i=1}^{n} V_{ij} \times X_i + V_{0j}\right) \tag{4}$$

$$Y_k(Z_1, Z_2, \dots, Z_p) = f_2\left(\sum_{j=1}^{p} W_{jk} \times Z_j + W_{ok}\right) \tag{5}$$

a. Determination of hidden layers and neurons

The determination of hidden neurons is discussed in Masters theory which states that the number of hidden neurons can follow the geometric pyramid rule [11], [12].

$$n_z = \sqrt{n_x n_y} \tag{6}$$

$$r = \sqrt[k+1]{\frac{n_x}{n_y}} \tag{7}$$

$$n_{z,m} = n_y\, r^{k-m+1} \tag{8}$$

b. Learning Algorithm

A commonly used learning algorithm is backpropagation. Backpropagation trains the network to obtain a balance between the network's ability to recognize existing patterns during training and the network's ability to respond correctly to new inputs with similar patterns. The backpropagation algorithm minimizes the label prediction error by changing the weights and biases in the network. At each layer, calculations are performed by multiplying the input by the appropriate weights, adding a bias, and applying an activation function. At the output layer, the error is calculated by finding the difference between the predicted result and the actual result. The weights are adjusted or modified with the gradient algorithm. The gradient indicates how much the error decreases or increases when the weights are adjusted. The process aims to find the global minimum cost with the lowest error.

The backpropagation algorithm training includes three phases: feedforward, backpropagation, and weight update. The three phases are repeated until a stopping condition

[DOI: 10.26714/jsunimus.13.1.2025.74-84]

is met. The commonly used stopping condition is the number of iterations or errors. Iteration will be stopped if the number of iterations performed has exceeded the maximum number of iterations set, or if the measured error (loss) has met the set tolerance limit [13].

c. Activation Function

The activation function is a mathematical function that converts inputs into outputs and is a key component in neural network processing [14]

i. The sigmoid function is a nonlinear function that produces an output in [0,1].

$$y = \sigma(x) = \frac{1}{1 + e^{-x}} \tag{9}$$

ii. Hyperbolic Tangent (tanh). The tanh activation function is nonlinear with input in the form of a single value and produces an output in [- 1,1].

$$y = \tanh(x) = \frac{e^{x} - e^{-x}}{e^{x} + e^{-x}} \tag{10}$$

iii. The softmax function is used to convert a score or weight vector into a probability distribution.

$$y = \frac{e^{xi}}{\sum_i e^{xi}} \tag{11}$$

2.6. Feedforward Neural Network

Feedforward Neural Network (FFNN) is the simplest type of artificial neural network. The basic components of a neural network are neurons or processing units that are connected to each other through weights. FFNN has no *loops* and *is fully connected* so there is no cycle in the reverse direction, which means that each *neuron in* one layer sends input to each *neuron in the* next layer and none of the weights provide input to the neuron in the previous layer [15]. The backpropagation algorithm performs learning on the FFNN by repeatedly learning a set of weights to classify the labels of tuples.

2.7. Long Short Term Memory

Long Short Term Memory (LSTM) is explicitly designed to learn long-term dependencies by adding *memory cells* that can store information for long periods of time. The LSTM network structure includes two conditions in the *cell*, namely *cell state* and *hidden state*. *Cell state* has three components, namely *forget gate*, *input gate*, and *output gate.* With these *gates*, LSTM is able to add and remove information to the *cell state*. The architecture is shown in Fig.1

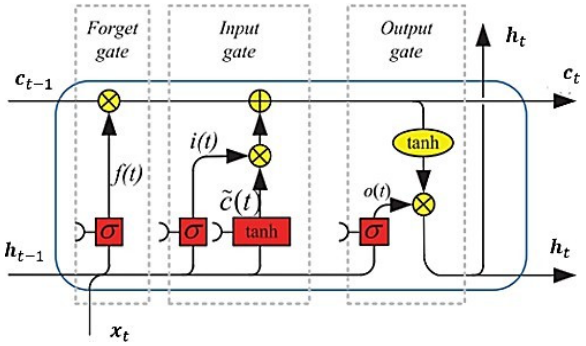

Fig 1. LSTM Architecture

The steps in the LSTM network are as follows: determines which information to keep

[DOI: 10.26714/jsunimus.13.1.2025.74-84]

or discard from the state cell through a layer called the forget gate which show in equation (12), determines the information that will enter the cell state through the input gate and added new candidate information to the cell which show in equation (13) and (14).

$$\boldsymbol{f}_t = \sigma\left(\boldsymbol{x}_t\boldsymbol{U}_f + \boldsymbol{h}_{t-1}\boldsymbol{W}_f + \boldsymbol{b}_f\right) \quad (12)$$

$$\boldsymbol{i}_t = \sigma(\boldsymbol{x}_t\boldsymbol{U}_i + \boldsymbol{h}_{t-1}\boldsymbol{W}_i + \boldsymbol{b}_i) \quad (13)$$

$$\tilde{\boldsymbol{c}}_t = \tanh(\boldsymbol{x}_t\boldsymbol{U}_c + \boldsymbol{h}_{t-1}\boldsymbol{W}_c + \boldsymbol{b}_c) \quad (14)$$

The next step is adding new information to the cell state which shown in equation (15) and determining the output. The calculation of the output value is shown in Equations (16), (17).

$$\boldsymbol{c}_t = (\boldsymbol{f}_t * \boldsymbol{c}_{t-1} + \boldsymbol{i}_t * \tilde{\boldsymbol{c}}_t) \quad (15)$$

$$\boldsymbol{o}_t = \sigma(\boldsymbol{x}_t\boldsymbol{U}_o + \boldsymbol{h}_{t-1}\boldsymbol{W}_o + \boldsymbol{b}_o) \quad (16)$$

$$\boldsymbol{h}_t = \boldsymbol{o}_t * \tanh(\boldsymbol{c}_t) \quad (17)$$

A loss function is a function that calculates the difference between the output produced by the classification model and the actual output. In multiclass classification tasks, the loss value is calculated using loss functions, one of which is the *categorical cross entropy function. Categorical cross entropy* is an optimization function that classifies data by predicting the probability of data falling into each class. The calculation is shown in Equation (18)

$$H(p,q) = -\sum_{i=1}^{n} p_i(x)\log(q_i(x)) \quad (18)$$

2.8. Model Evaluation

The performance of the model is judged by several factors, known as model evaluation metrics [16]. Evaluation can be done by forming a confusion matrix. The confusion matrix compares the model predictions with the true values in the known data to identify the number of correct and incorrect classifications. A reference confusion matrix for three- class sentiment classification is shown in Table 1.

Table 1. Confusion Matrix

Sentiment		Prediction		
		Positive	Neutral	Negative
Actual	Positive	TP	FPNet	FPNeg
	Neutral	FNetP	TNet	FNetNeg
	Negative	FNegP	FNegNet	TNeg

This paper use three components, various evaluation metrics can be calculated that help understand the performance of the model in sentiment analysis, namely accuracy, precision, and recall. Accuracy is the percentage of correctly classified data Accuracy provides a simple description and intuitive interpretation of the model's ability to correctly predict sentiment labels. Precision is a measure of how much of the data classified as positive by the model is actually positive. Recall is a measure of how much positive data is actually classified as positive.

2.9. Shopee Application

Shopee is a company that focuses on e-commerce owned by SEA Group, a technology company based in Singapore. The C2C (Customer to Customer) business model used by Shopee allows individuals, not just large companies, to sell products to other consumers through the Shopee platform. Shopee also focuses on the use of mobile devices so that sellers and buyers can conduct online transactions easily through apps on smartphones.

[DOI: 10.26714/jsunimus.13.1.2025.74-84]

Google Play is a digital distribution service provided by Google to browse, download, and update various applications on devices with the Android operating system. One of the features offered is user reviews of each application that allows users to provide ratings, reviews, experiences, and information related to the applications they download and use.

3. METHODOLOGY

The data used is sourced from the Google Play Store site in the form of user reviews on the Shopee application. The data was obtained using a scraping technique from the API provided by Google Play. Predictor variables (X) in the form of weights features or words from each review. The response variable (y) is the class sentiment classification, namely positive, neutral, and negative. The data used is Shopee review data from January to September 2023. The stages of analysis in this research are as follows.

1. Collecting data on user reviews of the Shopee application
2. Perform data preprocessing and data labeling
3. Visualize the sentiment results into a word cloud graph.
4. Divide the data into training data and test data with a proportion of 80%: 20%.
5. Perform data weighting on each feature using the TF-IDF method
6. Determine the number of layers and hidden neurons
7. Train the LSTM and the FFNN model using the training data
8. Evaluate the sentiment classification results with the data
9. Comparing the performance of FFNN and LSTM models
10. Determine the best model from the combination of layers and hidden units.
11. Interpretation of results and drawing conclusions.

4. RESULTS AND DISCUSSION

The data obtained in the form of Shopee application user reviews from January 01 to September 31, 2023 and obtained as many as 376,662 reviews. Next, a *preprocessing* process is carried out which includes data selection, *case folding, cleaning,* word *normalization, stopword removal, tokenization* and *stemming*. The *preprocessing* reduces the data to 230,263 data which presented in Table 2.

Table 2. Data Preprocessing Result

Index	Data
1	['lambat', 'niat', 'tidak', 'voucher', 'tidak', 'pakai', 'masalah', 'jaring', 'awas', 'tinggal', 'online', 'shop']
2	['mantap ', 'puas']
3	['layan', 'mantap', 'tolong', 'jual', 'sifat', 'kecewa', 'mohon', 'silang', 'cek', 'terima kasih', 'moga', 'maju', 'mantap']
⋮	⋮
230.263	['aplikasi', 'bagus', 'bantu']

After *preprocessing* the data, we labeled the data into three sentiment classes, namely positive, negative, and neutral. Data labeling is done using the *VADER* (*Valanced Aware Dictionary Sentiment*) *lexicon* dictionary which has more than 7500 lexical features. Each feature has a valence score on a scale of -4 to +4 which indicates the polarity of the sentiment.

[DOI: 10.26714/jsunimus.13.1.2025.74-84]

Labeling with the VADER lexicon is done by first translating the data into English, then calculating the compound score on each review to obtain its sentiment label. The compound score is obtained by summing the valence value of each word in the dictionary. After data labeling, the next step is to select features that will be used as x variables. This stage selects words that are not sentiment formers. Words that include response variables are words that contain certain sentiments, such as positive or negative, so they are not sentiment formers. Features that belong to a particular sentiment are reduced to the whole data. Feature determination refers to the VADER lexicon dictionary, by taking words that have valence values in the range [-1.6, 1.6] as variable x and using individual judgment. The valence value range in the VADER dictionary is [-4, 4] so that words within the specified range can still be used to classify the response variable. The result of data labelling and feature selection is presented in Table 3.

Table 3. Data Labelling Result

Index	*Translated*	*Compound*	Feature Selection	Sentiment
1	['sluggish', 'intention', 'no', 'voucher', 'no', 'used', 'problem', 'network', 'caution', 'missed', 'online', 'shop']	-0,875	niat voucher pakai jaring awas tinggal online shop	Negative
2	['great', 'satisfied']	0,7845	-	Positive
3	['service', 'great', 'please', 'help', 'seller', 'nature', 'disappointed', 'please', 'cross', 'check', 'thank you', 'hope', 'forward', 'great']	0,9501	layan tolong jual sifat mohon silang cek terima kasih moga maju	Positive
⋮	⋮	⋮	⋮	⋮
230,263	['application', 'good', 'help']	0,6808	aplikasi	Positive

Sentiment based on VADER lexicon can be describe in Fig 2.

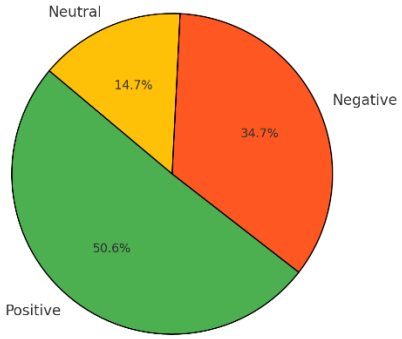

Fig 2. Pie Chart of Sentiment

The Fig 2 displays sentiment analysis results from customer reviews, categorized as Positive, Negative, and Neutral. Out of the total reviews, 50.60% (91,865) were positive, indicating a majority favorable response. Meanwhile, 34.72% (63,038) of the reviews were negative, and 14.68% (26,662) were neutral. This breakdown shows that most customers expressed positive sentiments, followed by a significant portion with negative feedback, while neutral reviews were the smallest group.

Words as select features that will be used as x variables in positive, negative, and neutral

[DOI: 10.26714/jsunimus.13.1.2025.74-84]

sentiment can be describe in Fig 3. The Fig 3 shows word clouds representing common terms associated with positive, neutral, and negative sentiments in customer reviews for an application. The most prominent words in the positive sentiment word cloud include "belanja" (shopping), "aplikasi" (application), "barang" (goods), "kirim" (send), and "terima kasih" (thank you). These words suggest that users are generally satisfied with the shopping experience, the products, and the service, and they appreciate the ease of use.



Fig 3. Word Cloud of Feature Selection

In the neutral sentiment word cloud, words such as "belanja," "aplikasi," "barang," and "kirim" also appear, but with other terms like "iklan" (advertisement) and "voucher," indicating that users may have a mixed opinion about certain features or promotions in the application without strong positive or negative feelings. The negative sentiment word cloud prominently features words like "aplikasi," "barang," "kirim," "susah" (difficult), and "login" (login). This suggests that users are frustrated with aspects like the difficulty of using the application, issues with sending products, login problems, and advertisements.

Next is training the models. Training was conducted for 20 iterations (*epochs*) to achieve convergence with the *Stochastic Gradient Descent* (SGD) optimization technique for parameter updating, with the size of each *batch* in a single training of 32 data. *The backpropagation* algorithm is applied to model training by initializing weights and biases at the 1st *epoch*. The bias before training is initialized with a value of 1. After going through the *feedforward* stage*, the* loss function of the training data is calculated, then *backpropagation* and updating of weights and biases are performed. The *backpropagation* stage requires calculating the gradient of the loss function, namely *categorical cross entropy* against the output of the model calculated using the chain rule. Next, the derivative is multiplied by the derivative of the activation function at each *gate of the* LSTM, which results in a gradient for each *gate* to update the parameters.

Evaluation of classification results is done using a test dataset to see the performance of the trained model. The model learns patterns from features in the training data to predict the sentiment class of the test data. A summary of model evaluation after model training is presented in Table 4.

Table 4. Model Evaluation on Test Data

Metrics	FFNN 1	FFNN 2	LSTM 1	LSTM 2
accuracy	68,74%	68,51%	68,93%	68,88%
precision	60,82%	61,50%	61,29%	61,39%
recall	54,62%	54,19%	56,10%	55,59%

The summary evaluation of the classification results shows that the FFNN and LSTM networks with 1 hidden layer each have better accuracy and recall than the 2 hidden layer

[DOI: 10.26714/jsunimus.13.1.2025.74-84]

network, but have lower precision values. It can be said that in classifying the sentiment of Shopee app user reviews, the 1-hidden-layer LSTM algorithm has higher classification accuracy than other models. The confusion matrix of the best model is presented in Table 5.

Table 5. Confusion Matrix of Sentiment Classification

Sentiment		Prediction		
		Positive	Neutral	Negative
Actual	Positive	15250	473	2593
	Neutral	3110	693	1622
	Negative	3094	392	9086

The LSTM model with 1 hidden layer is able to correctly classify positive, neutral, and negative sentiments on Shopee app user reviews by 68.93%. With an average precision value of 61.29%, it means that of all the predictions made by the model, about 61.29% of them actually match the specified class and with a recall value of 56.10%, it means that of all the reviews that are actually positive, neutral, and negative, the model is able to recognize about 56.10% of them.

The model evaluation results can be said to be quite good. This is influenced by several factors, such as unrepresentative data quality, imbalance between sentiment classes, and lack of variety, as well as features that are less meaningful and do not represent sentiment well. Therefore, sentiment analysis performed using artificial neural network models, namely FFNN and LSTM, which work by learning patterns in the training data to be able to predict the sentiment class of the test data, has quite good performance, but there is still room for improvement in order to produce more accurate and comprehensive predictions.

5. CONCLUSION

The conclusions obtained from the research are as follow: sentiment classification provides results that Shopee app users provide reviews with positive sentiment as much as 50.60%, reviews with negative sentiment of 34.72%, and neutral sentiment of 14.68%. Sentiment visualization mostly describes convenience, general information, and complaints related to the use of the application and delivery of goods. The overall most optimal FFNN and LSTM model in classifying the sentiment of Shopee app users has an architecture with 1 hidden layer that has 137 hidden neuron units. Model performance evaluation shows that the LSTM model with 1 hidden layer has better classification accuracy than the FFNN model, with accuracy, precision, and recall rates of 68.93%, 61.29%, and 56.10%, respectively.

Suggestions that can be given for further research are perform a more optimized preprocessing stage and use the LSTM algorithm for sentiment classification by trying different optimization techniques, hyperparameters, and iterations to improve classification performance.

REFERENCES

[1] A. K. Tyagi and P. Chahal, “Artificial Intelligence and Machine Learning Algorithms,” in *Challenges and Applications for Implementing Machine Learning in Computer Vision*, IGI Global, 2020, pp. 188–219. doi: 10.4018/978-1-7998-0182-5.ch008.

[2] B. Liu, *Sentiment Analysis and Opinion Mining*. Chicago: Morgan & Claypool Publishers, 2012.

[3] M. Mhatre, D. Phondekar, P. Kadam, A. Chawathe, and K. Ghag, "Dimensionality reduction for sentiment analysis using pre-processing techniques," in *2017 International Conference on Computing Methodologies and Communication (ICCMC)*, Jul. 2017, pp. 16–21. doi: 10.1109/ICCMC.2017.8282676.

[4] C. Slamet, A. R. Atmadja, D. S. Maylawati, R. S. Lestari, W. Darmalaksana, and M. A. Ramdhani, "Automated Text Summarization for Indonesian Article Using Vector Space Model," *IOP Conf. Ser. Mater. Sci. Eng.*, vol. 288, no. 1, p. 012037, Jan. 2018, doi: 10.1088/1757-899X/288/1/012037.

[5] T. Rahman, F. E. M. Agustin, and N. F. Rozy, "Normalization of Unstructured Indonesian Tweet Text For Presidential Candidates Sentiment Analysis," in *2019 7th International Conference on Cyber and IT Service Management (CITSM)*, Jakarta: IEEE, Nov. 2019, pp. 1–6. doi: 10.1109/CITSM47753.2019.8965324.

[6] K. V. Ghag and K. Shah, "Comparative analysis of effect of stopwords removal on sentiment classification," in *2015 International Conference on Computer, Communication and Control (IC4)*, Sep. 2015, pp. 1–6. doi: 10.1109/IC4.2015.7375527.

[7] R. K. Das, M. Islam, M. M. Hasan, S. Razia, M. Hassan, and S. A. Khushbu, "Sentiment analysis in multilingual context: Comparative analysis of machine learning and hybrid deep learning models," *Heliyon*, vol. 9, no. 9, p. e20281, Sep. 2023, doi: 10.1016/j.heliyon.2023.e20281.

[8] J. Singh and V. Gupta, "Text Stemming: Approaches, Applications, and Challenges," *ACM Comput Surv*, vol. 49, no. 3, p. 45:1-45:46, Sep. 2016, doi: 10.1145/2975608.

[9] C. Hutto and E. Gilbert, "VADER: A Parsimonious Rule-Based Model for Sentiment Analysis of Social Media Text," *Proc. Int. AAAI Conf. Web Soc. Media*, vol. 8, no. 1, Art. no. 1, May 2014, doi: 10.1609/icwsm.v8i1.14550.

[10] D. Sarkar, *Text Analytics with Python: A Practitioner's Guide to Natural Language Processing*. New York: Apress, 2019.

[11] D. A. Lusia and A. Ambarwati, "PERBANDINGAN PERAMALAN UNIVARIAT DAN MULTIVARIAT ARIMA PADA INDEKS HARGA SAHAM GABUNGAN," *J. Stat. Univ. Muhammadiyah Semarang*, vol. 6, no. 2, Art. no. 2, 2018, doi: 10.26714/jsunimus.6.2.2018.%p.

[12] D. A. Lusia and A. Ambarwati, "Desain Faktorial untuk Pembuktian Teori Masters dalam Penentuan Jumlah Lapisan dan Neuron Tersembunyi pada Peramalan Multivariat dengan Jaringan Syaraf Tiruan," *J. Teknol. Inf. Dan Ilmu Komput.*, vol. 7, no. 1, Art. no. 1, Feb. 2020.

[13] J. J. Siang, *Jaringan Syaraf Tiruan Dan Pemrograman Menggunakan Matlab*. Yogyakarta: ANDI, 2009. Accessed: Jul. 04, 2017. [Online]. Available: https://www.belbuk.com/jaringan-syaraf-tiruan-dan-pemrograman-menggunakan-matlab-p-8134.html

[14] T. Szandała, "Review and Comparison of Commonly Used Activation Functions for Deep Neural Networks," in *Bio-inspired Neurocomputing*, A. K. Bhoi, P. K. Mallick, C.-M.

Liu, and V. E. Balas, Eds., Singapore: Springer, 2021, pp. 203–224. doi: 10.1007/978-981-15-5495-7_11.

[15] R. C. Staudemeyer and E. R. Morris, "Understanding LSTM -- a tutorial into Long Short-Term Memory Recurrent Neural Networks," pp. 1–42, Sep. 2019, doi: 10.48550/arXiv.1909.09586.

[16] U. B. Mahadevaswamy and P. Swathi, "Sentiment Analysis using Bidirectional LSTM Network," *Procedia Comput. Sci.*, vol. 218, pp. 45–56, Jan. 2023, doi: 10.1016/j.procs.2022.12.400.